ME-AGS wiring diagram –
For Yamaha (EF5200DE Generators)

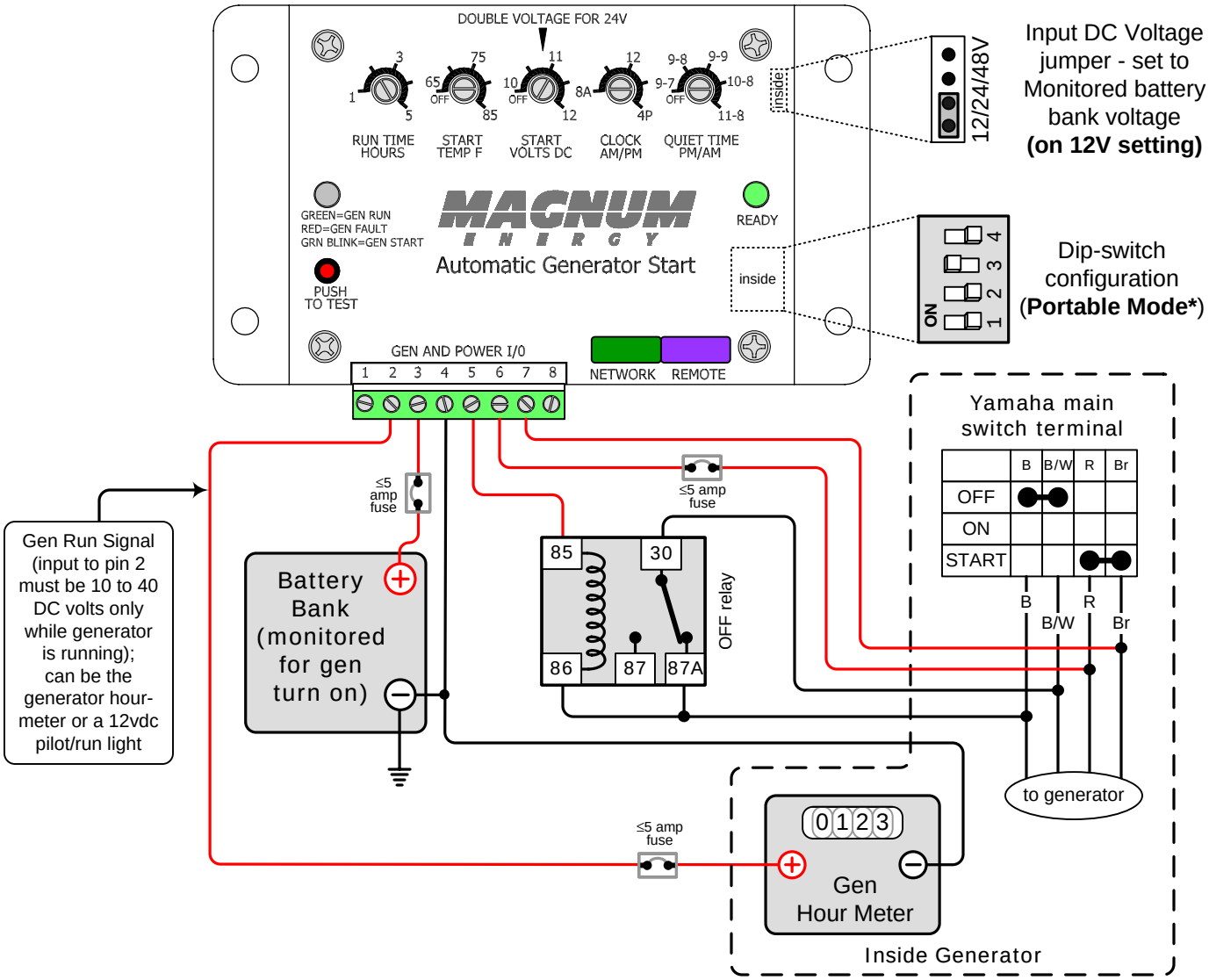

"OFF Relay" is a SPDT 30 Amp, 12 VDC coil relays [shown in the non-energized (N.C.) position]

ME-AGS Relay Timing for **Portable Mode***

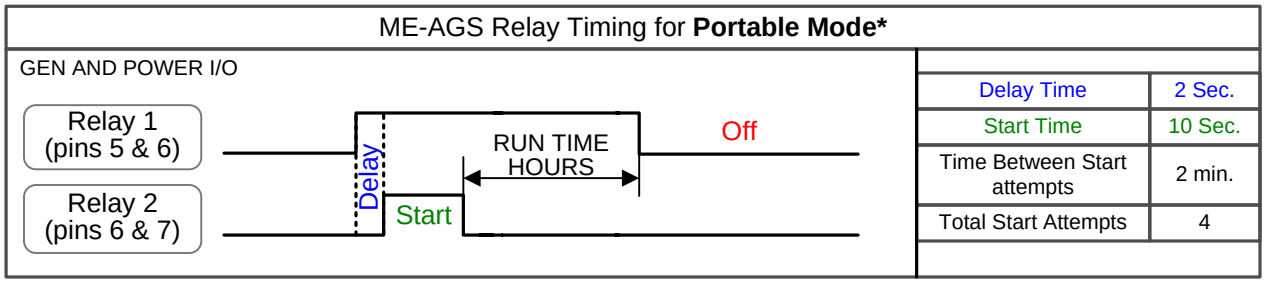

Delay Time	2 Sec.
Start Time	10 Sec.
Time Between Start attempts	2 min.
Total Start Attempts	4

*** to enable Portable Mode, the ME-AGS must be revision 3.2 or higher**

Magnum Energy, Inc. provides this diagram to assist in the installation of the Auto-Generator Start controller. Since the use of this diagram and the conditions or methods of installation, operation and use are beyond the control of Magnum Energy, Inc., we do not assume responsibility and expressly disclaim liability for loss, damage or expense arising out of the installation, operation and use of this unit.

06-23-2008